Atera SIGNO

Audi A3 Sportback Reling	09/2004–02/2013	Audi A6 Allroad	06/2006–05/2012	Seat Ibiza ST	07/2010–
Audi A6 Avant	03/2005–	Audi Q7	02/2006–	VW Polo Cross	06/2010–
Audi A4 Avant	04/2008–	Seat Altea XL	12/2006–	Ford Focus Turnier	04/2011–
Audi A4 Allroad	08/2009–	Seat Altea Freetrack	01/2008–	Ford Mondeo Turnier	02/2012–
VW Golf VII Variant	08/2013–	VW Up Cross	09/2013–		

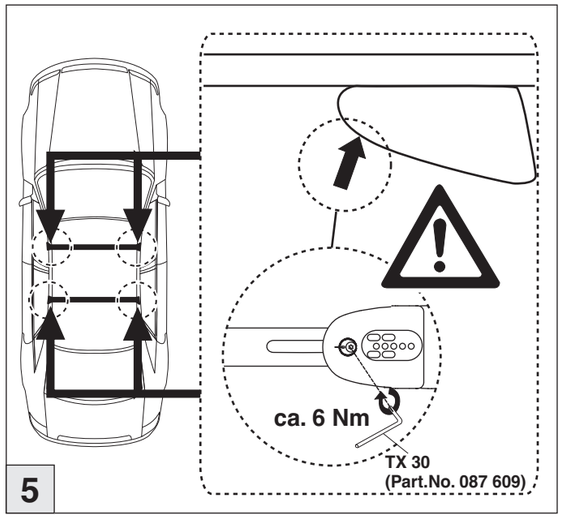

5

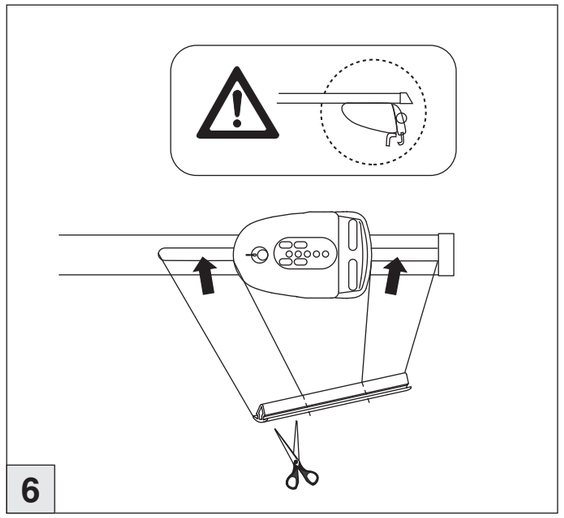

6

nur bei / only for Part-No.: 045 208

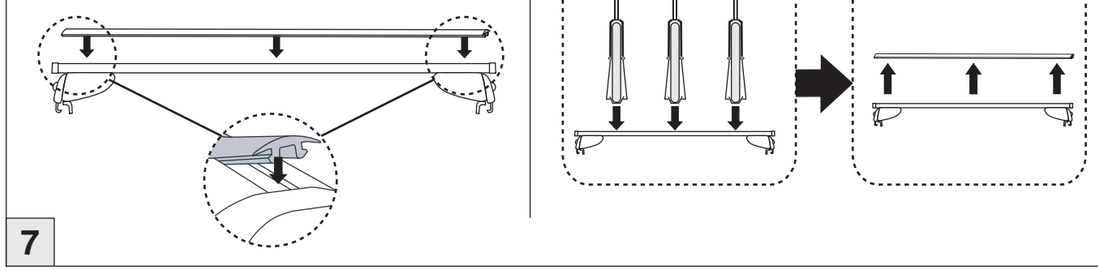

7

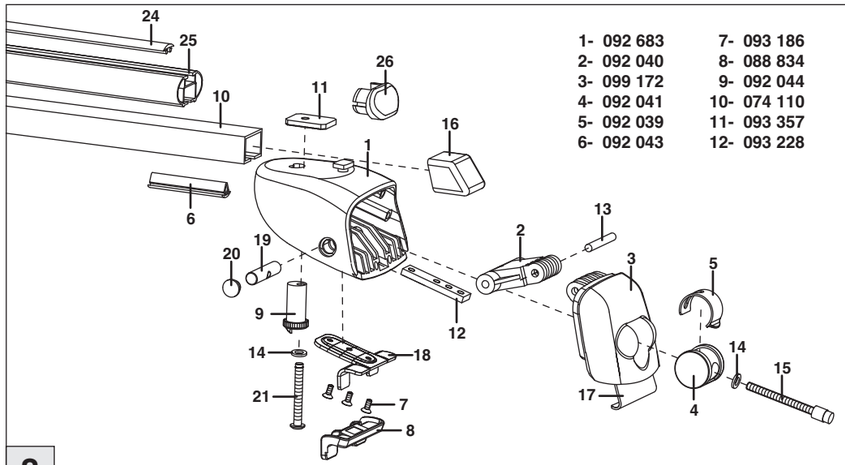

1- 092 683	7- 093 186	13- 087 657	19- 087 643	
2- 092 040	8- 088 834	14- 087 886	20- 092 045	
3- 099 172	9- 092 044	15- 087 65x	21- 093 491	
4- 092 041	10- 074 110	16- 088 184		
5- 092 039	11- 093 357	17- 095 736		
6- 092 043	12- 093 228	18- 093 179		

nur bei/only for Part-No.: 045 208
24- 092 075
25- 093 110
26- 092 071

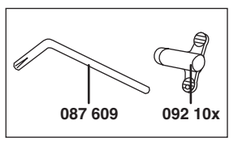

8

Atera GmbH
Im Herrach 1
D-88299 Leutkirch
Internet: www.atera.de

MADE IN GERMANY

Atera SIGNO

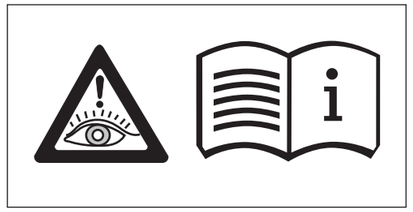

Audi A3 Sportback Reling	09/2004–02/2013
Audi A6 Avant	03/2005–
Audi A6 Allroad	06/2006–05/2012
Audi Q7	02/2006–
Audi A4 Avant	04/2008–
Audi A4 Allroad	08/2009–
Seat Altea XL	12/2006–
Seat Altea Freetrack	01/2008–
Seat Ibiza ST	07/2010–
VW Polo Cross	06/2010–
Ford Focus Turnier	04/2011–
Ford Mondeo Turnier	02/2012–
VW Golf VII Variant	08/2013–
VW Up Cross	09/2013–

Art.-Nr. / Part-No. : 044 208
Art.-Nr. / Part-No. : 045 208

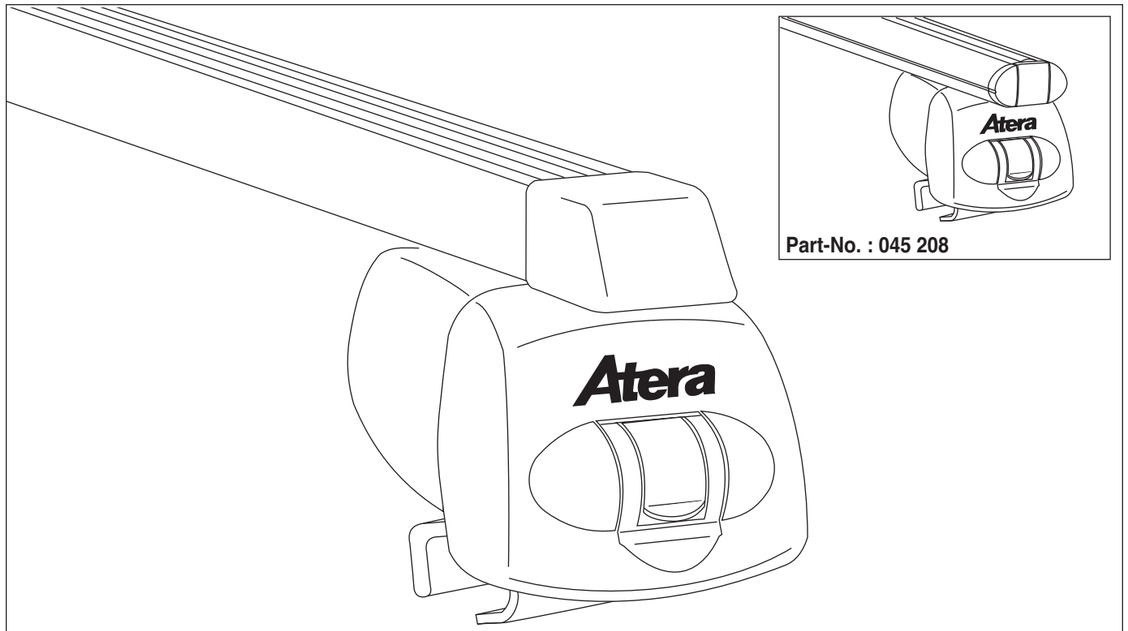

Part-No. : 045 208

Part-No. : 044 208

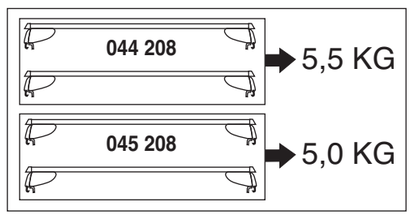

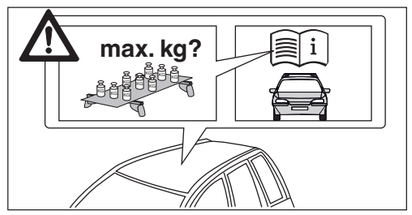

060 691 - Stand 17 10 2013 Rev.10

Atera SIGNO

Audi A3 Sportback Reling	09/2004–02/2013	Audi A6 Allroad	06/2006–05/2012	Seat Ibiza ST	07/2010–
Audi A6 Avant	03/2005–	Audi Q7	02/2006–	VW Polo Cross	06/2010–
Audi A4 Avant	04/2008–	Seat Altea XL	12/2006–	Ford Focus Turnier	04/2011–
Audi A4 Allroad	08/2009–	Seat Altea Freetrack	01/2008–	Ford Mondeo Turnier	02/2012–
VW Golf VII Variant	08/2013–	VW Up Cross	09/2013–		

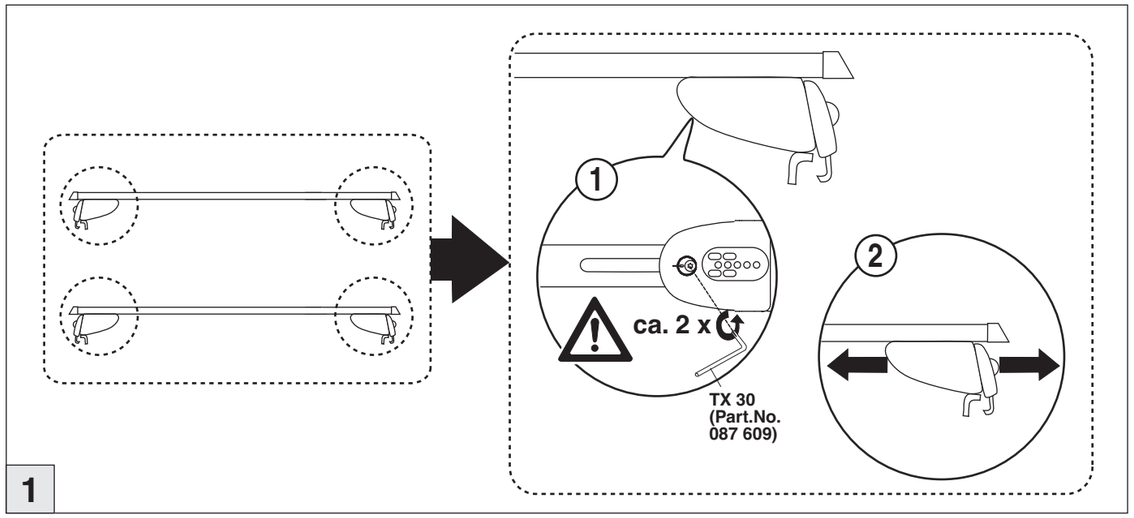

1

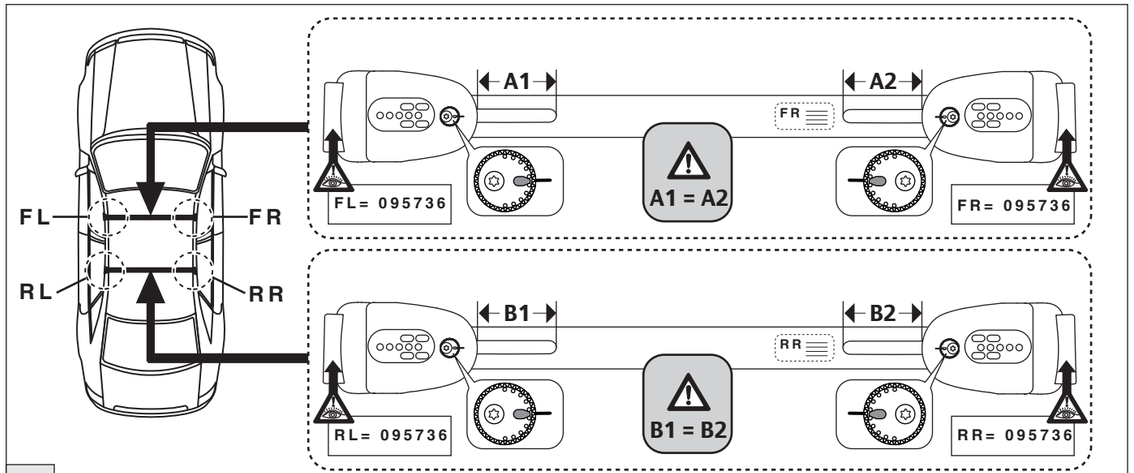

2

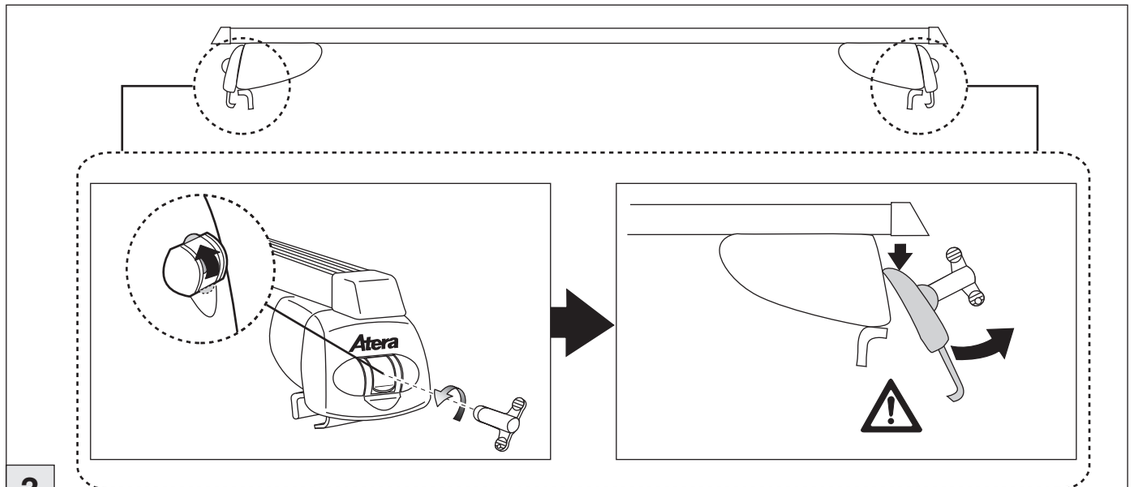

3

Atera SIGNO

Audi A3 Sportback Reling	09/2004–02/2013	Audi A6 Allroad	06/2006–05/2012	Seat Ibiza ST	07/2010–
Audi A6 Avant	03/2005–	Audi Q7	02/2006–	VW Polo Cross	06/2010–
Audi A4 Avant	04/2008–	Seat Altea XL	12/2006–	Ford Focus Turnier	04/2011–
Audi A4 Allroad	08/2009–	Seat Altea Freetrack	01/2008–	Ford Mondeo Turnier	02/2012–
VW Golf VII Variant	08/2013–	VW Up Cross	09/2013–		

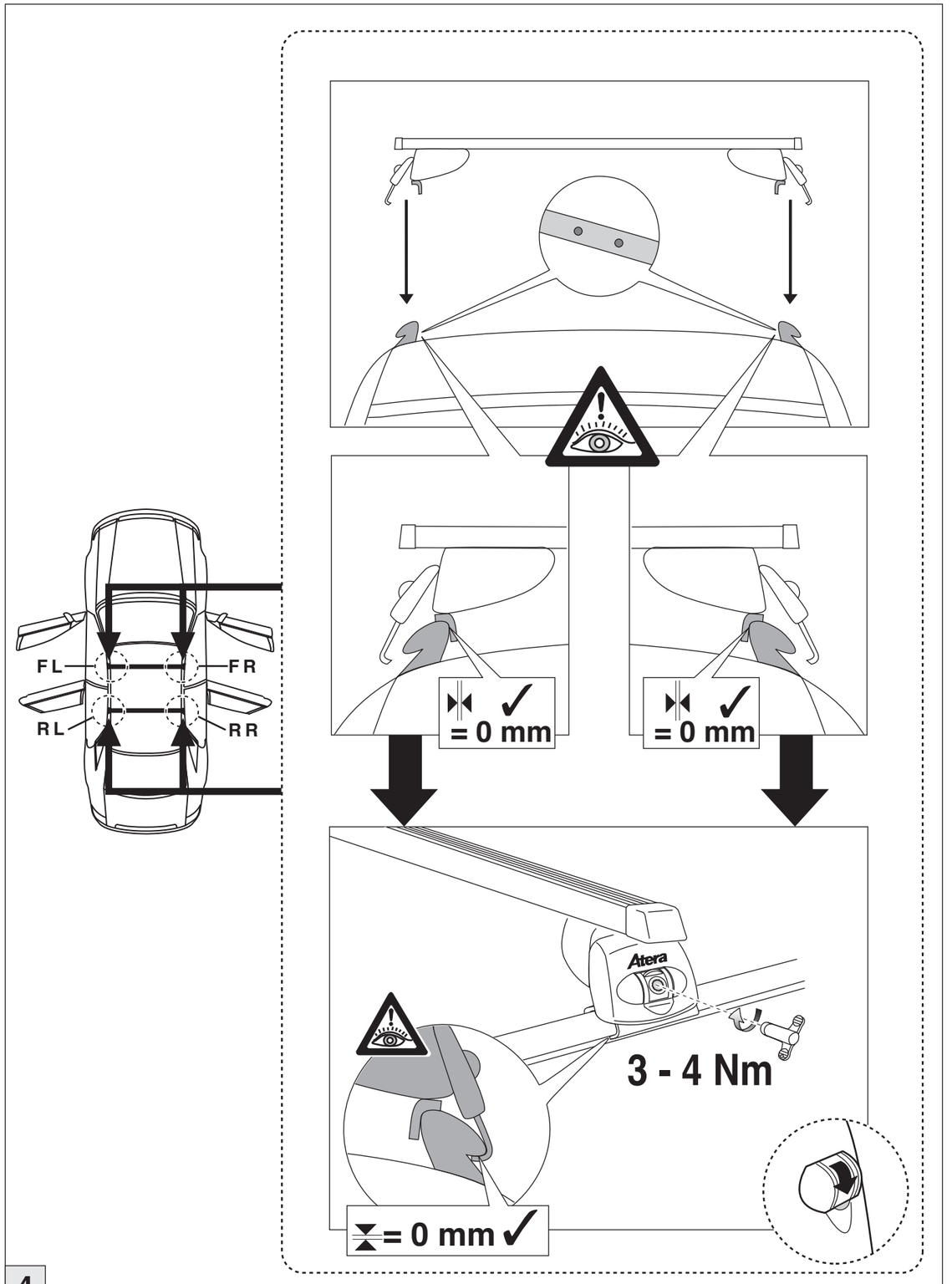

4